

Door Alarm Manual

Hipac
We're here for life

CONTENTS

Overview	3
Components	3
Door Top Alarm Order Form	4
Door and Frame Preparation	5
Door Preparation	5
Frame Preparation	6
Door Alarm Fitment	7
44mm Securahinge and Domed Cap	7
54mm Securahinge and Domed Cap	9
Double Swing Hinges	9
Layouts For Non-Standard Door Leaf Thickness	10
Wiring	12
Door Alarm	12
Other Door Alarms (If applicable)	12
Electronically Modified Hinge	13
Control Box	13
Control Cable	14
Power Cable	15
Staff Attack Cable	15
Door Top Alarm Wiring Diagram	16
Door Top and Bottom Alarm Wiring Diagram	16
Testing	17
Normal Operation	18
Failsafe	18

Alarm Delay Settings 19

Control Box Version 20
Identification 20
Version Additional Features 20

Latching Function 21

Troubleshooting 22
Door Top Alarm Diagnostic Flow Chart 22

Disclaimer 23

Overview

Hipac Door Alarms are available to suit 44mm and 54mm door widths and are made to the specified length to suit the application.

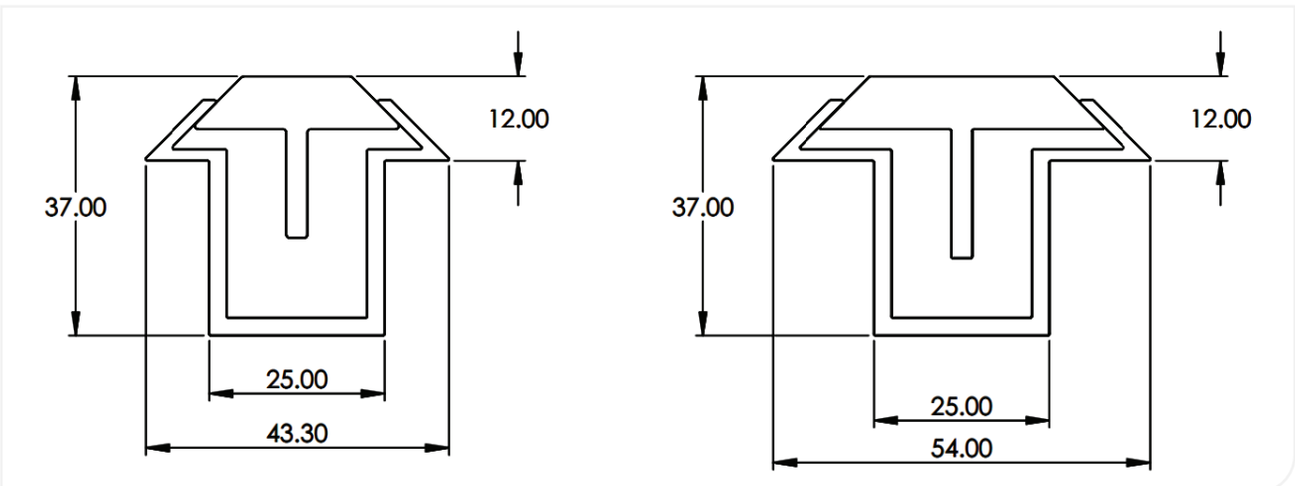

An additional 12mm is to be taken off the overall height of the door to accommodate each alarm.

All components are quality checked, tested and approved before despatch. The sign-off includes a unique serial number which is engraved on the bottom of the alarm, which is recorded in our records and certificates for quality assurance. The components that make up the Door Alarm system must be handled and installed with care.

Components

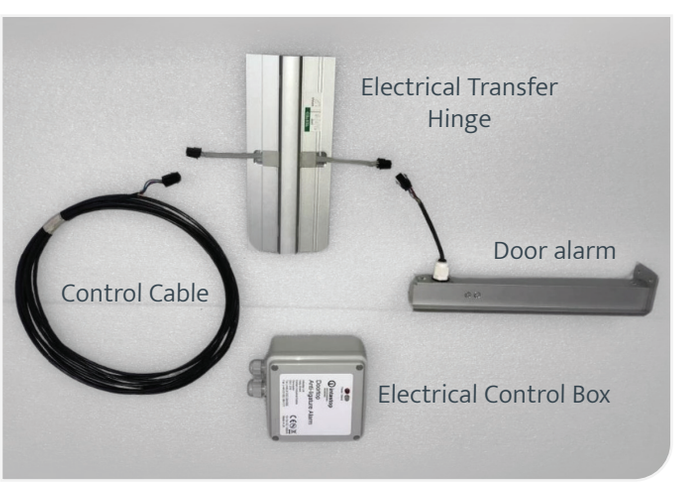

NOTE: The electrical transfer hinge in the left image is only for illustration, see datasheets for specific transfer hinge detailing.

Door Alarms pre-July 2018 have orange and white plugs, not black plugs. Further information on these can be provided if required.

Hipac

Door Top Alarm Order Form

Project:						Date:				
Company:						Duress System:				
Checked by:						Signed:				
ATTENTION: Door Top/Bottom Alarms are made to the dimensions provided to match finished door width, no further deductions are made for hinges etc. There may be the possibility to slightly trim the sensor (<5mm) however no ability to extend. Any changes to provided details will require components to be re-ordered.										
Door Reference No.										
Door Width (mm)										
Door Thickness (mm)										
Door Top Alarm (one per column)										
Door Bottom Alarm (one per column)										
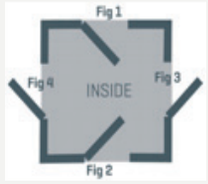	Door Handing	Fig 1 or 3								
		Fig 2 or 4								
	Hinge Type	Single Swing								
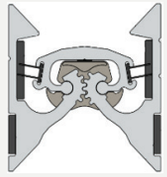		Double Swing								
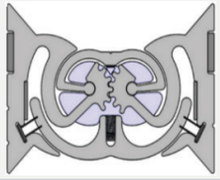		Shrouded Double Swing								

Door and Frame Preparation

Hipac takes no responsibility for incorrect operation of Door Alarms that are not fitted as per these instructions.

Door Preparation

The joining 6mm x 6mm channel (highlighted in yellow below) is only required if the Door Top Alarm is being used with a Door Bottom Alarm and connects the 60mm x 20mm x 40mm pockets.

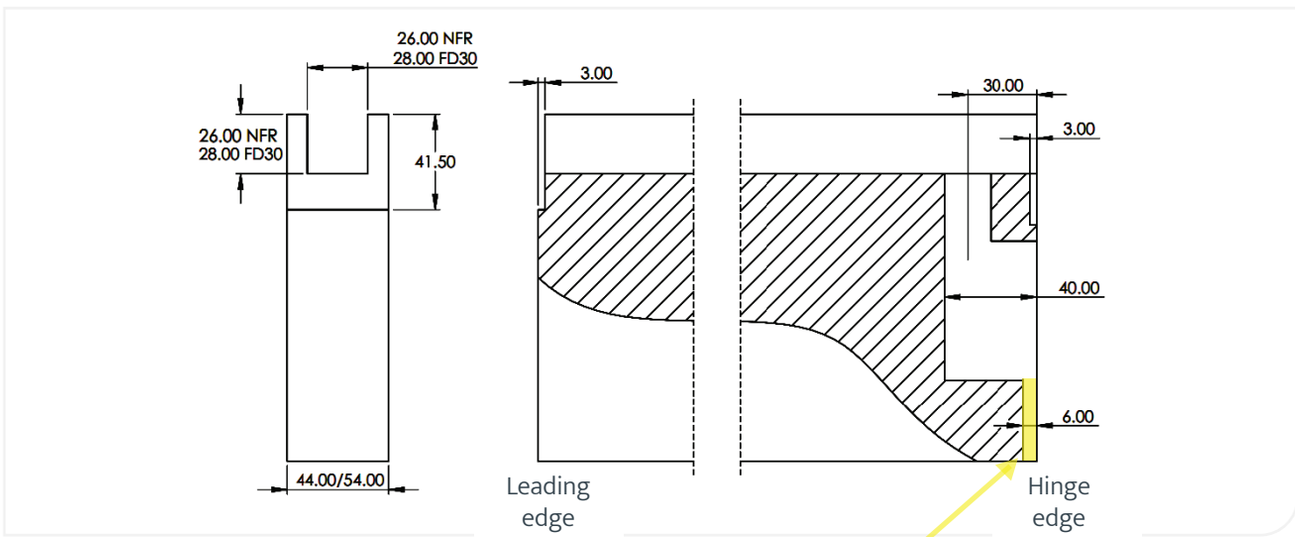

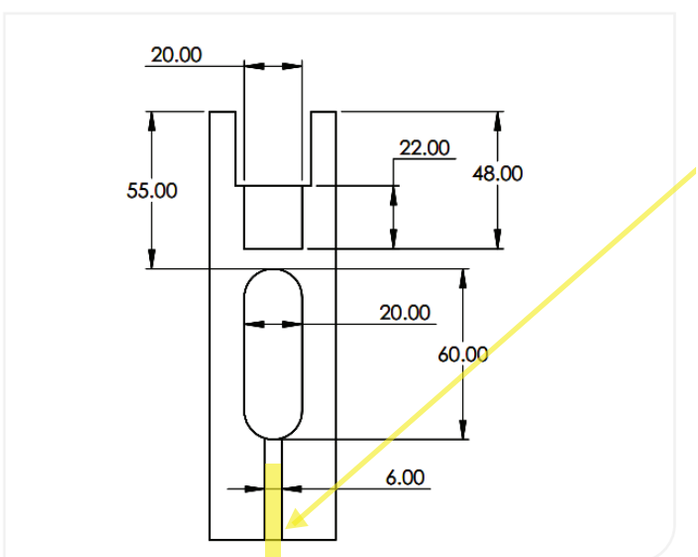

Only required for doors with both a Door Top Alarm and a Door Bottom Alarm.

If the Door Alarm is being used in conjunction with a double swing hinge variant on a 54mm door, the 41.5mm x 3mm feature is machined on the hinge side of the door instead of the 20mm x 22mm x 3mm machining.

Frame Preparation

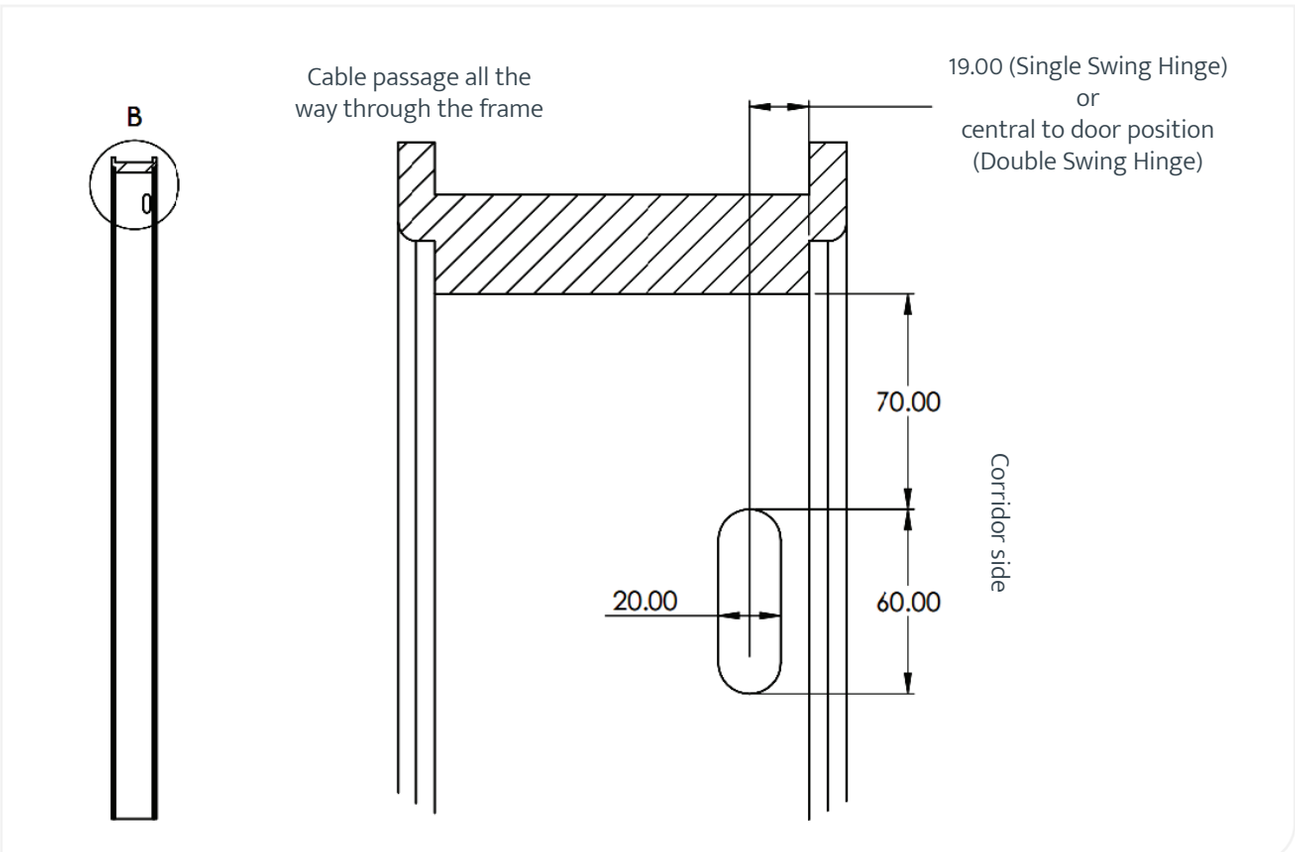

Door Alarm Fitment

When installing the Door Alarm systems, the EM section positioning is particularly important. First, install the alarm in the door, then position the 200mm section as shown in the diagrams below. Once this section is fixed, install the full-length hinge butted up tight to the 200mm electronically modified section.

The hinge is supplied in two pieces, the main section of the hinge which takes most of the door's weight and the electrically modified section, at the top, which has the cables running through it. The reason for this is for ease of service, if at any time there is a problem, the electrically modified piece can simply be taken out without having to take the door off.

44mm Securahinge and Domed Cap

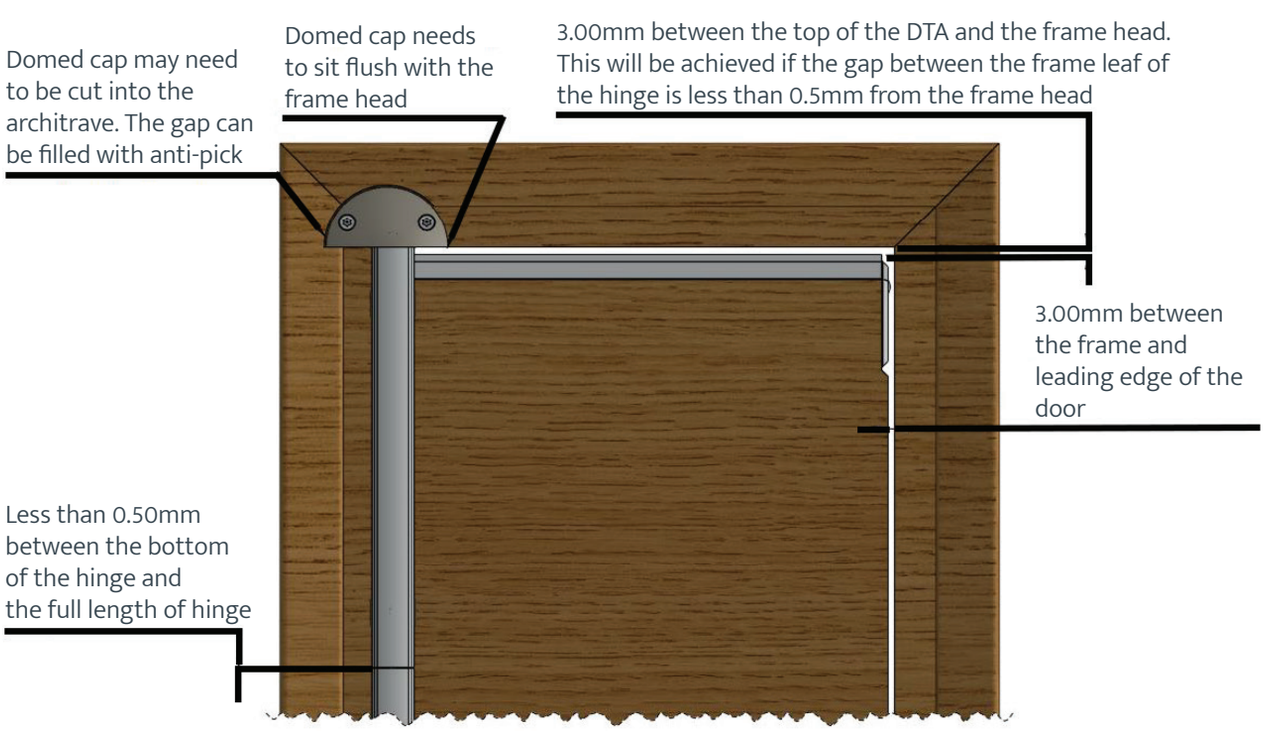

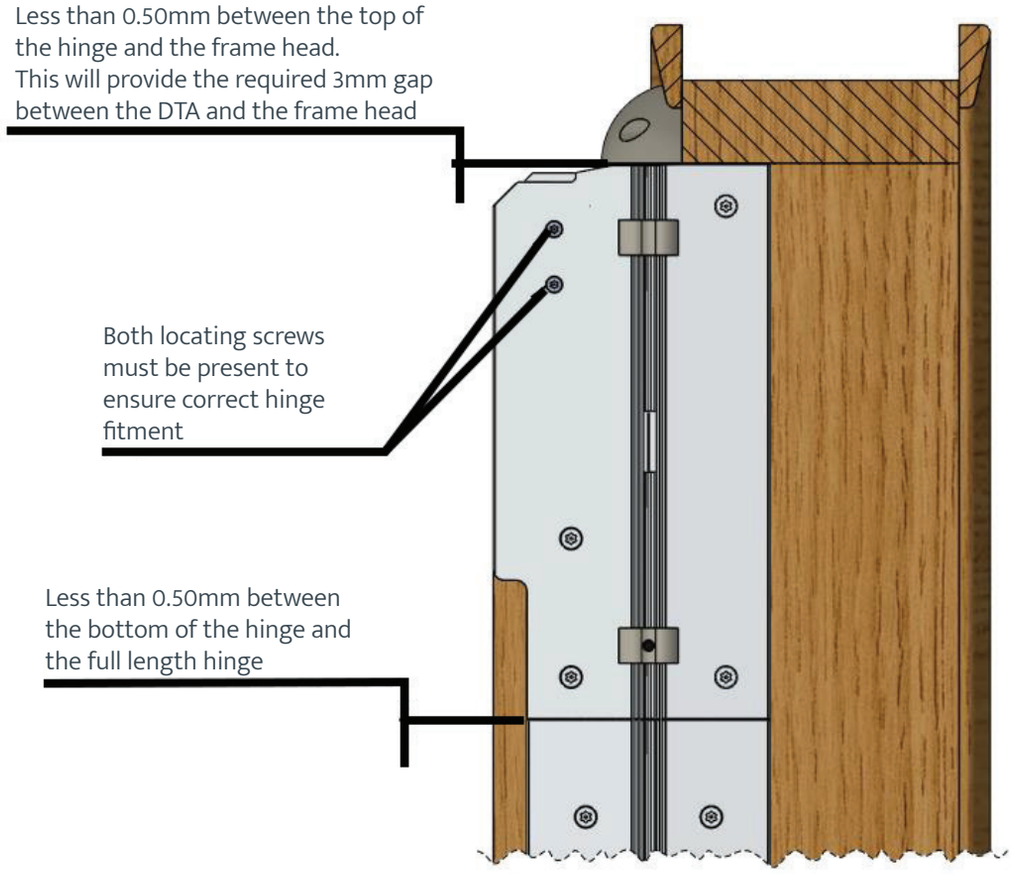

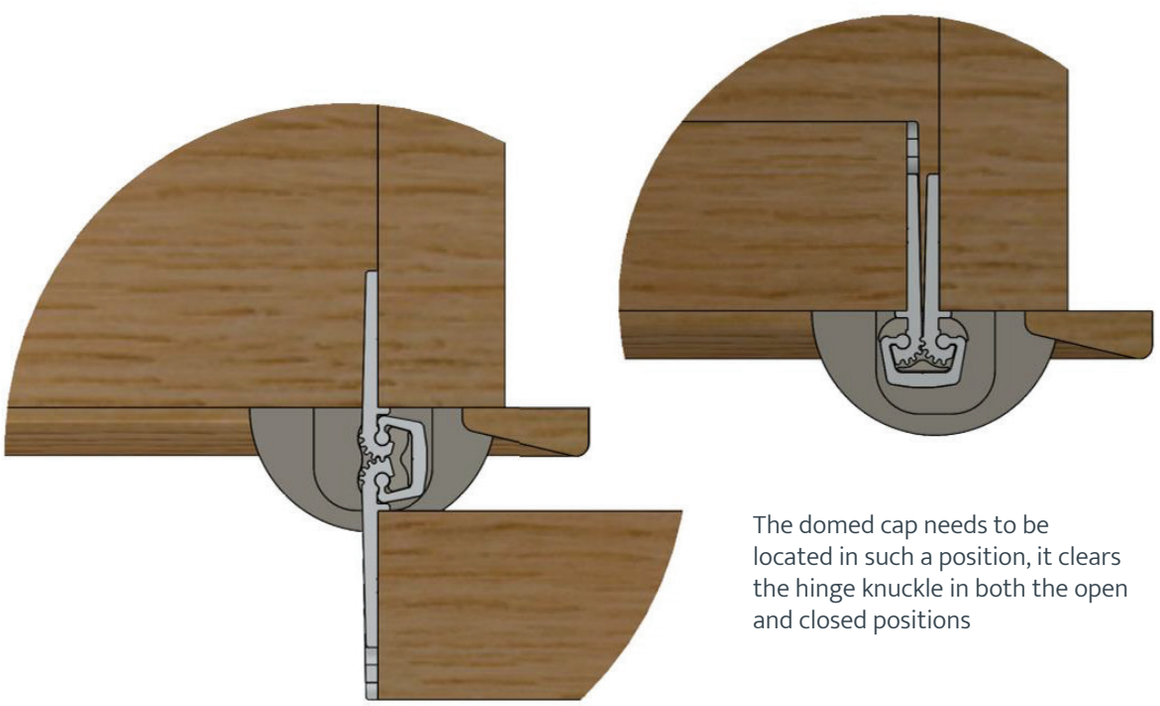

The domed cap needs to be located in such a position, it clears the hinge knuckle in both the open and closed positions

54mm Securahinge and Domed Cap

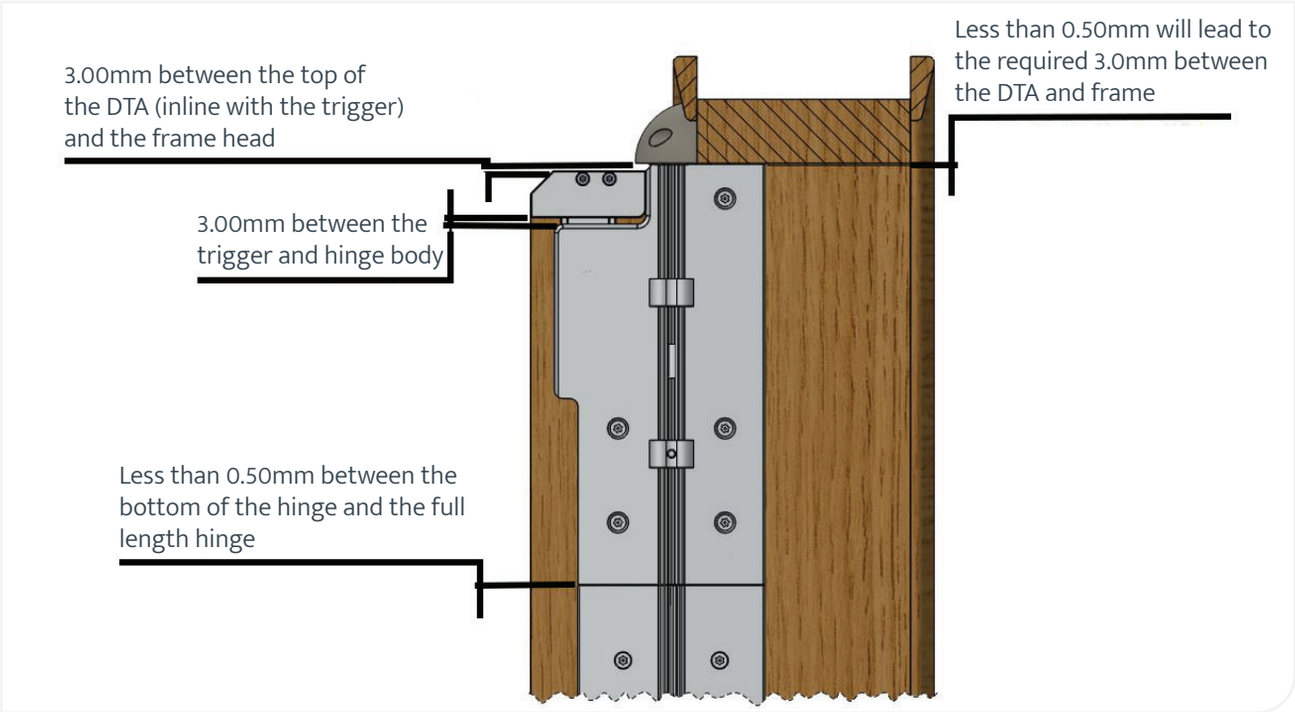

Double Swing Hinges

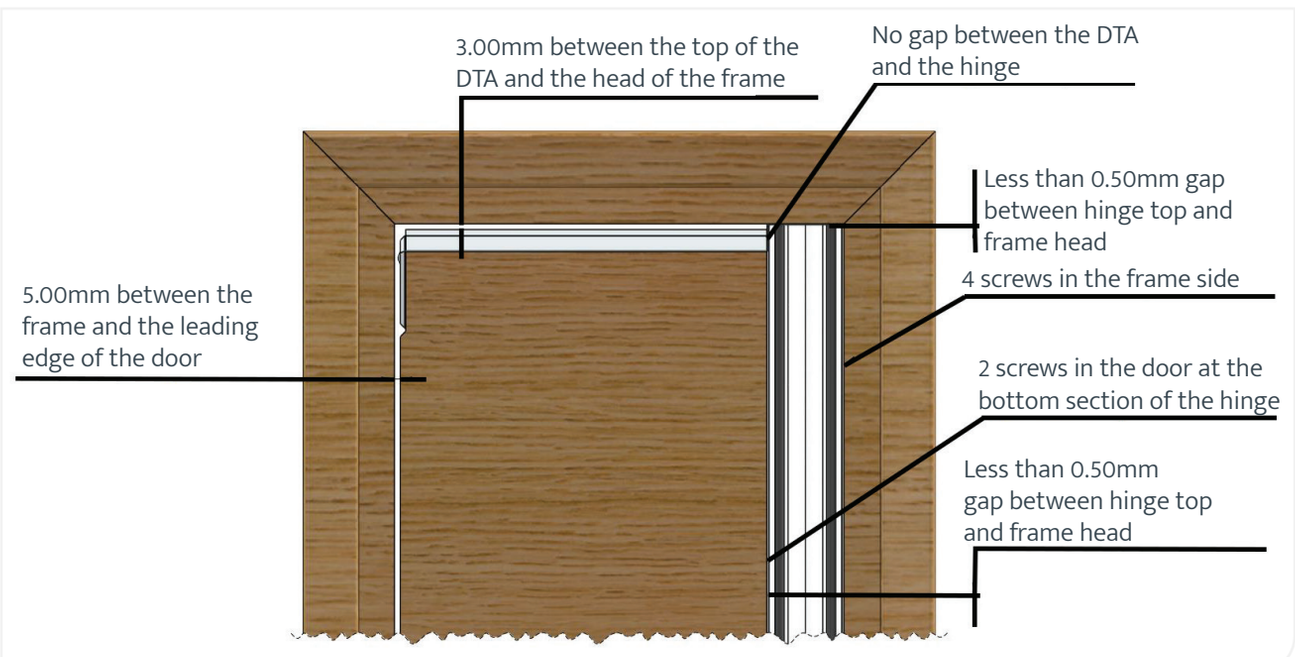

NOTE: Refer to the hinge datasheet for recommended installation position in frame. A setback from the edge of the frame is required for double swing applications.

Layouts For Non-Standard Door Leaf Thickness

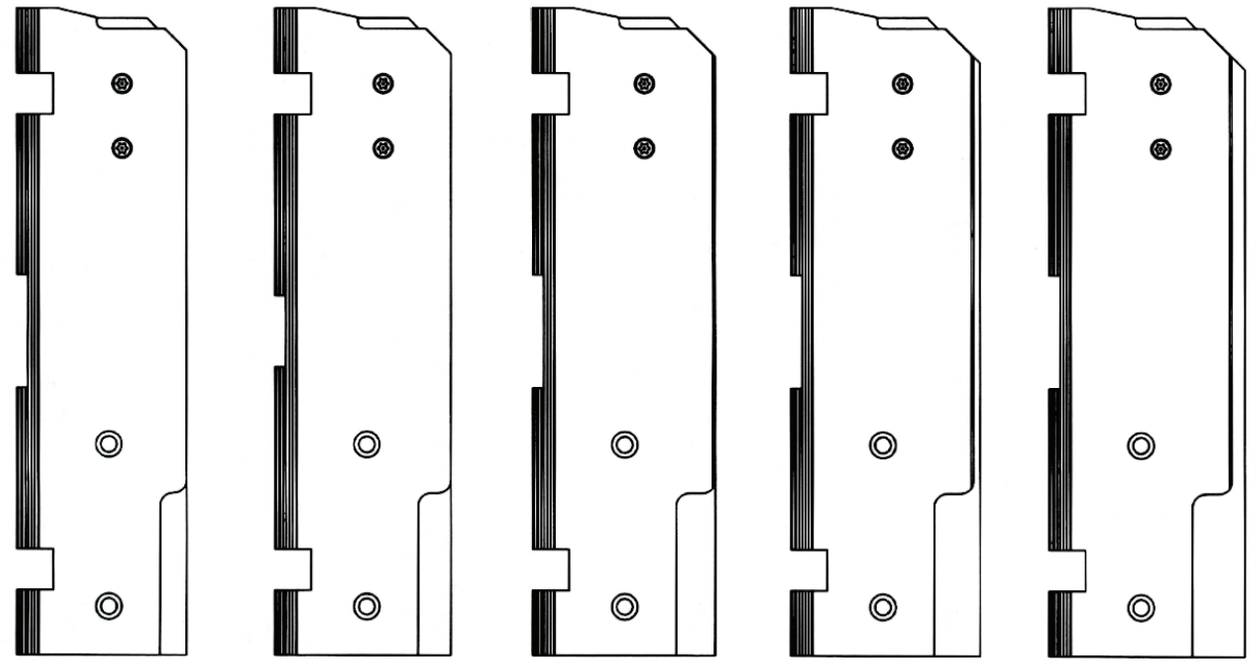

40mm Door | 42mm Door | 44mm Door (Standard) | 46mm Door | 48mm Door

40mm and 42mm solutions require a specially machined hinge and end cap.

46mm and 48mm solutions use a standard 44mm hinge however, the DTA must be mounted flush with the hinge knuckle side of the door.

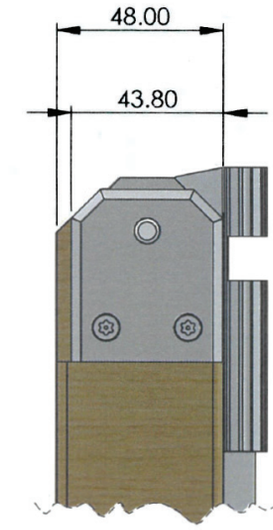

Layouts For Non-Standard Door Leaf Thickness

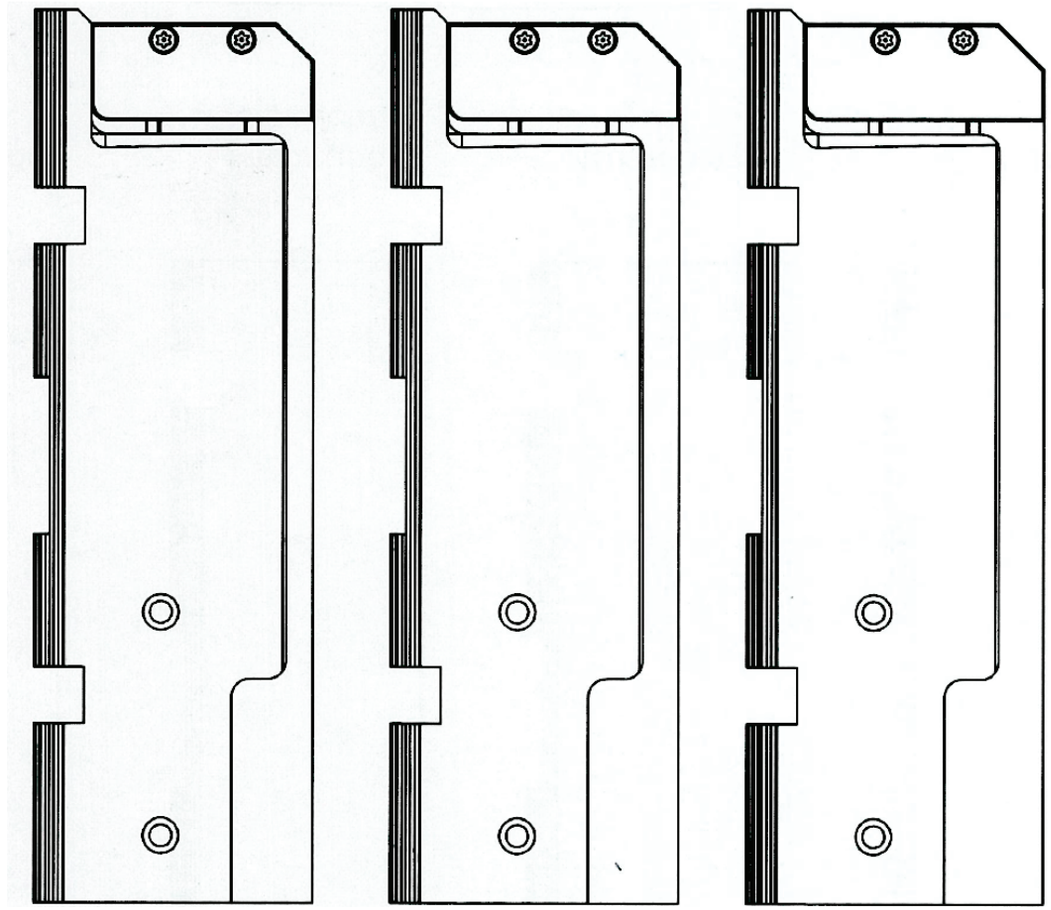

50mm 52mm 54mm

All using standard 54mm Securahinge Electrically Modified Hinge Section.

A special end cap is required for the 50mm and 52mm solutions.

Wiring

Order of installation:

1. Door Alarm(s)
2. Electrically modified hinge then full-length hinge
3. Cabling to the control box
4. Control box
5. 12V transformer for control box
6. Wire into staff attack system

NOTE: Steps 3-6 may be completed prior to steps 1-2 if coordinated with Hipac.

Door Alarm

The Door Top Alarm plugs directly into the door-side of the electronically modified hinge.

Other Door Alarms (If Applicable)

Other Door Alarms will use an adapter wiring loom to join to the Door Top Alarm. This will plug in between the door-side of the hinge and the Door Top Alarm if the additional alarm is attached to the door. If the alarm is located elsewhere, the loom will plug in between the frame-side of the hinge and the control cable. Where possible the standard black plugs are used. Where the cable needs to be trimmed to length to suit the application, a Wago connector is used. Simply lift the orange lever on the terminal, insert the cable and close the lever. This will securely connect the two cables without the need for any special tools.

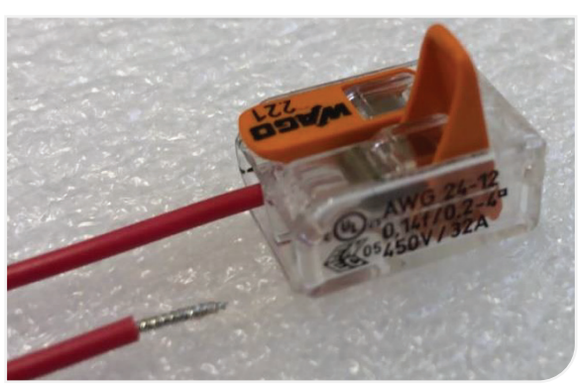

Electronically Modified Hinge

All Hipac electrically modified hinges use the standard black plugs (2019 onwards). One connects to the Door Alarm(s), and the other connects to the control box via the control cable.

Control Box

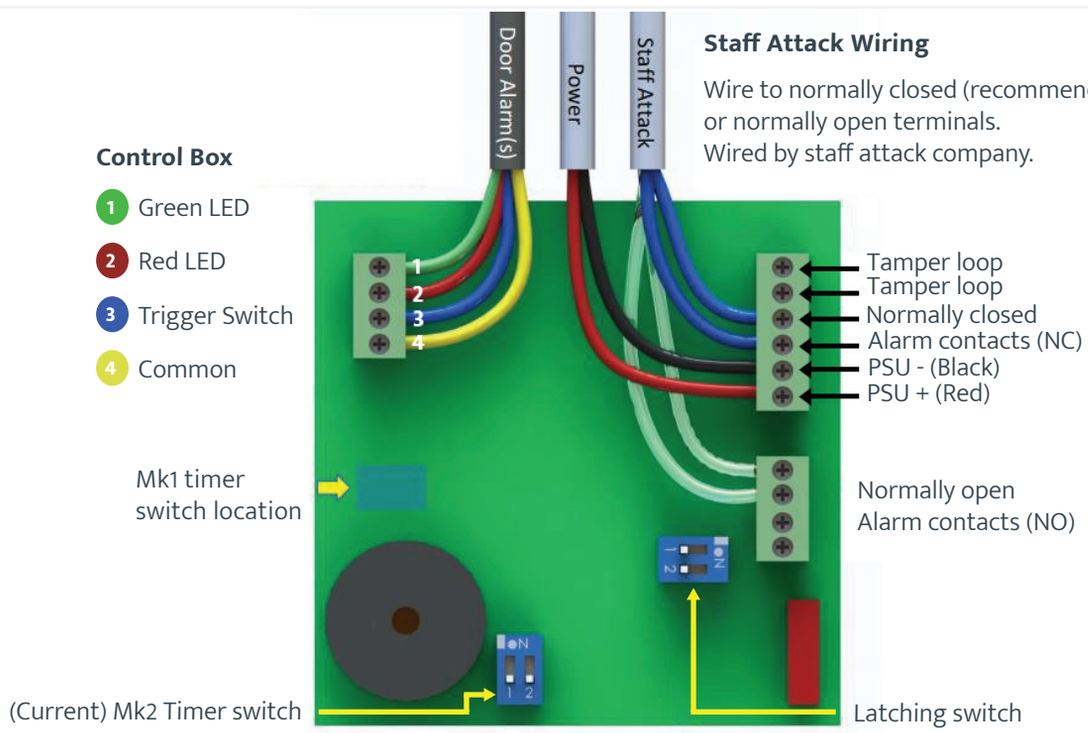

Wired Control Box, Image 1



Pre-wired Control Box, Image 2

NOTE: The Control Boxes may be provided pre-wired as per the image. Where Control Boxes are supplied pre-wired, the box should not be opened and internal settings should not be changed.

NOTE: Control Boxes manufactured before 2019 will have a black cable instead of the yellow cable.

Control Cable

The Control Cable needs to connect the electronically modified hinge to the control box. This cable must be fitted inside a cable conduit with a minimum internal diameter of 12mm to allow for future servicing.

If this conduit is not used, servicing may be impossible without damage to the framework and/or walls. Hipac will not cover work on the control cable if the conduit is not used.

The green, red, blue, and yellow wires in the control cable for the Door Alarm(s) need to be wired into the top left set of terminals as shown in Image 1 above.

Cable Colour	Function	Board Reference
Green	Green LED	LDG
Red	Red LED	LDR
Blue	Switch circuit	SW
Yellow	Common	COM

Power Cable

The power supply for the control box must be 12V DC rated to at least 100mA per control box. This needs to be wired into the 'GND' and '+12V' terminals on the right side of the box as shown on the diagram. We recommend that no more than three control boxes be wired into one fused spur and that one spur does not power more than one room.

Once the control box has 12V DC, the red power LED will illuminate on the outside of the box.

At this stage, the Door Alarm(s) should function as intended however, when triggered, the control box will beep, and the staff attack system will not alarm. This should be tested at this stage and the staff attack should only be wired in if the alarms pass the testing.



Staff Attack Cable

This cable needs to be installed by the staff attack company. This has the option of either being wired into the normally closed or normally open contacts. Hipac recommend wiring into the Normally Closed (N/C) contacts, as in the event of a break in the cable between the control box and the staff attack system, the alarm will be triggered. If wired to the Normally Open (N/O) contacts, the alarm will not be triggered in the event of a cable break.

The staff attack system should not be connected until the Door Alarm(s) and Control Box are powered on and working correctly.

Door Top Alarm Wiring Diagram

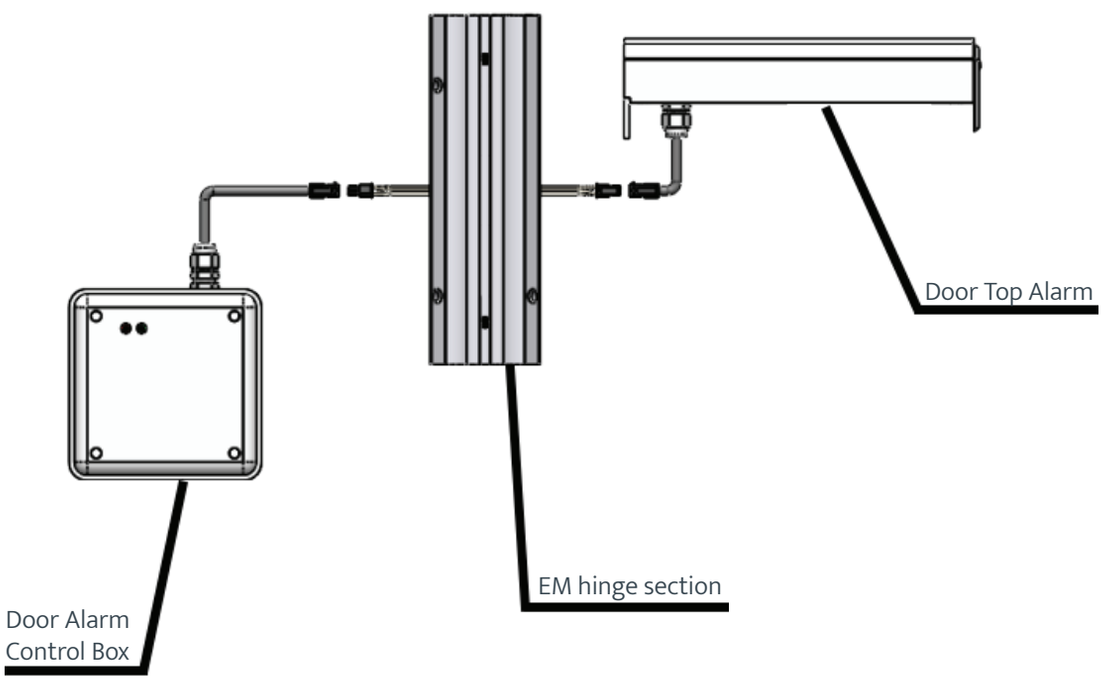

Door Top and Bottom Alarm Wiring Diagram

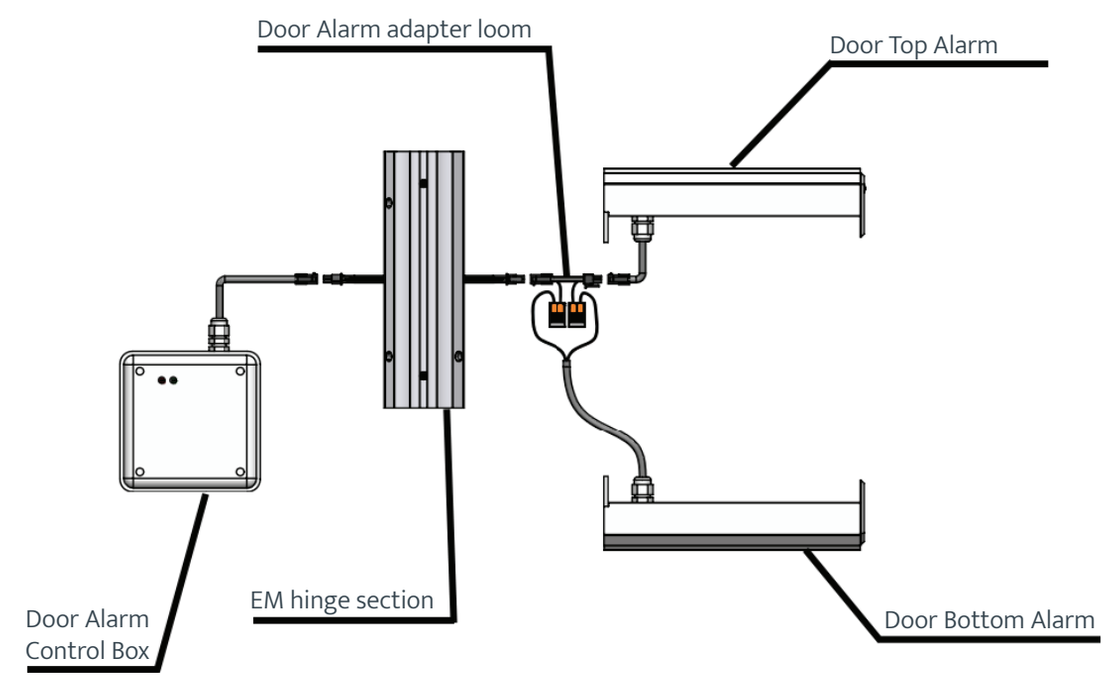

Testing

The Door Alarm systems should be tested regularly. The frequency of testing should be determined by your risk assessment policy.

Once the system is powered up, the red power LED should always be visible on the outside of the control box, indicating that the system has power. The status LED next to the power LED shows the state of the system. The status LED is duplicated on the leading edge of the Door Top Alarm, which is only activated when a magnet is held below or to the side of the LED.

1. When the alarm is powered up and has cycled through the initial three status colours (red, amber, then green), which takes roughly 3 seconds, it is ready to test.
2. While looking at the LED on the Door Top Alarm, press the alarm bar down once and release. The LED should display green, indicating it is powered up.

   Remember, a magnet is required if the LED on the Door Top Alarm is being used.
3. While the LED is still green, press and release again. This should temporarily change the LED from green to orange, then back to green when released. This indicates the system is registering the presses. This should be done at each end and along the centre of each alarm on the doorset to ensure the presses are being registered throughout the system.
4. If a full test is being conducted, a long press should be performed to test the entire system. After the pre-set time delay, the LED should turn red, and the staff attack system should be activated.
5. After approximately 20 seconds for the Mk1 box or 5 seconds for the Mk2 box, the unit will reset itself, and the red LED will disappear. See the control box version section (Section 13) to identify whether your box is Mk1 or Mk2. The control box resets, but the staff attack system still needs to be reset as per the Staff Attack Instructions.

Green LED	Amber LED	Red LED
Door Alarm has been pressed once and it has power.	Door Alarm has been pressed whilst in green light mode. This indicated the presses are being registered.	Door Alarm is sending out alarm signal and has either been held down for the set duration, has repeatedly been pressed or has a fault if continuous.
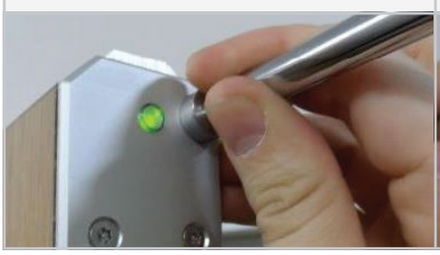		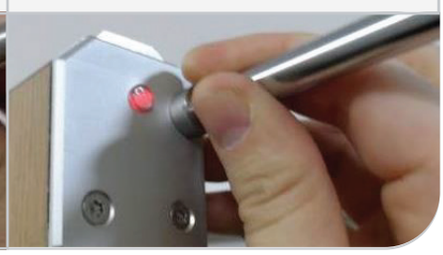

NOTE: If there are any problems with the testing, see the Trouble Shooting Guide in Section 15.

Normal Operation

In normal operation, the Door Alarms are passive and should not activate until a ligature attempt occurs. Once the alarm detects a ligature attempt or tampering with the system, the control box will send out an alarm signal until the problem is resolved. Once the issue is resolved, the staff attack system can be reset, and the system will return to monitoring.

After each alarm, a test should be conducted to check the system's functionality.

Failsafe

The Door Alarm system has a built-in failsafe function. If any functional part of the Hipac system experiences a fault, the alarm will be triggered. On the Mk2 boxes, this will send out the alarm signal until the problem is resolved. If there is no capability to isolate the Door Alarms from the staff attack system, the 12V power supply for the control box can be switched off to stop the alarm signal. If the alarm enters this state of constant alarm, contact Hipac.

Alarm Delay Settings

As standard from Hipac, the system will be set with a 10-second delay. See the control box version section (Section 13) to identify your box version and the relevant timing options.

The timing settings are printed on the circuit board next to the switch from 2020 onwards. Inside the control box, as highlighted in the image below with the large white arrow, is the timing switch with two toggles.

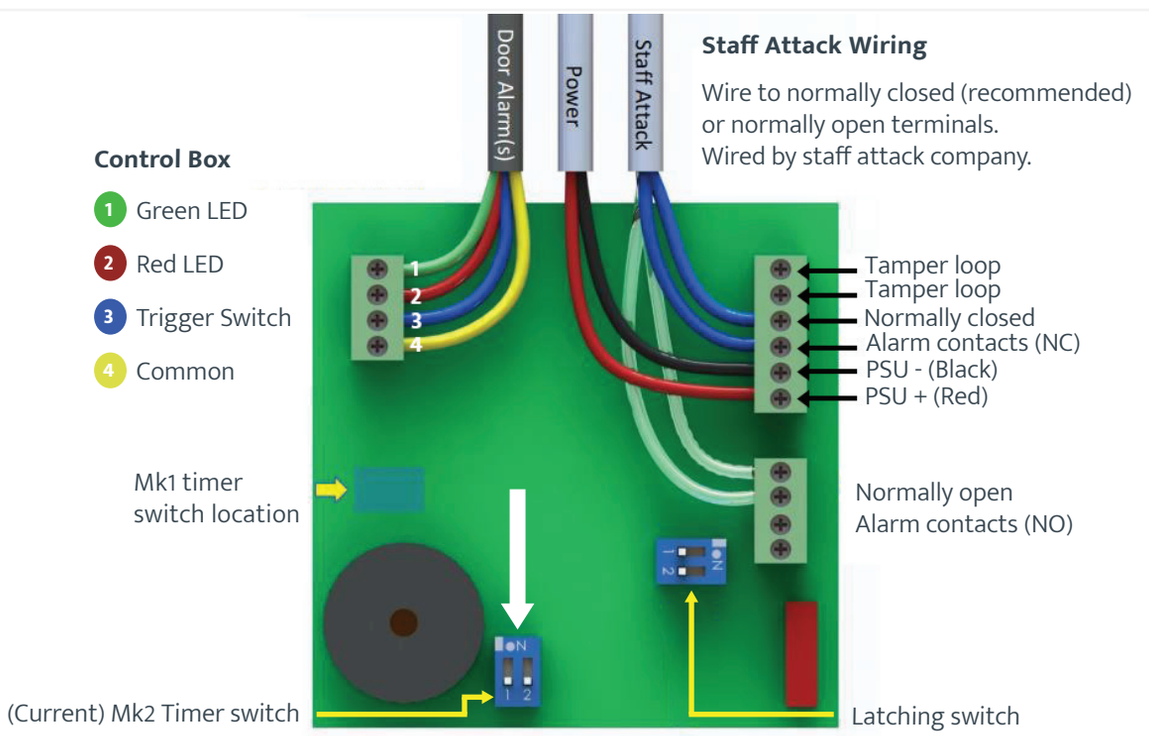

Wired Control Box

By altering these switches, the delay can be adjusted. The options are as follows:

Switch Position	Control Box Version		
	Mk1	Mk2	Mk3
1	5	5	0
2	10	10	2
3	20	15	5
4	30	20	10

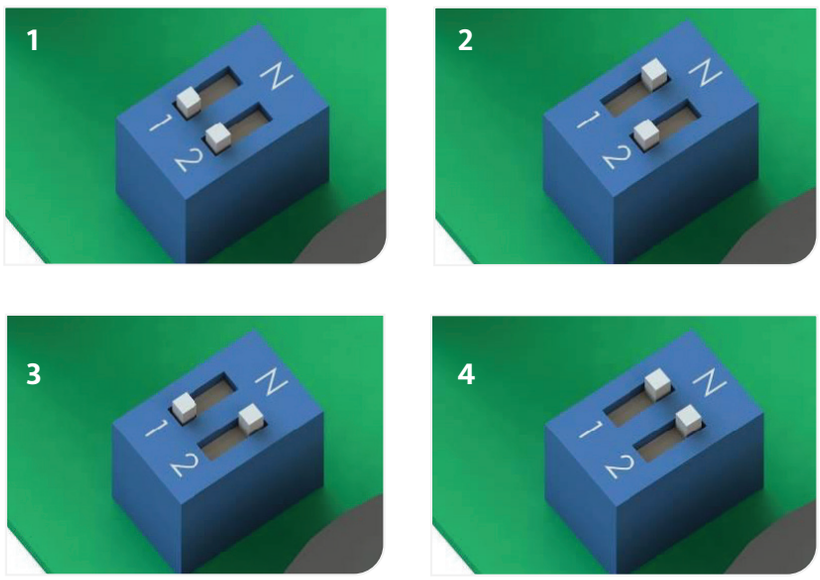

Control Box Version

Identification

There have been multiple versions of the Control Box.

	Mk1	Mk2	Mk3
Timespan	Up to 2020	2020 - 2023	2023 onwards
External ID	With no power to the box, one red and one clear LED	With no power to the box, two clear LEDs	With no power to the box, two clear LEDs and a power socket
Internal ID	One set of blue switches	Two sets of blue switches	One set of red switches with wiring for power socket

Version Additional Features

Version	Mk1	Mk2	Mk3
Additional features	Standard	As per Mk1 but: It will alarm until the cause for the alarm has been dealt with. The latching feature has been added. The timing options have changed and are now printed on the circuit board.	As per Mk2 but: The latching feature has been removed. The timing options have changed. There is a power socket and power supply adapter available (sold separately).

Latching Function

There is an optional latching function on all Mk2 Door Alarm control boxes from 2020 to 2023. This function ensures that the Door Alarm which triggered the alarm is physically checked every time it is triggered, as alarms can be reset remotely.

Once the latching function is activated and the alarm is triggered, the control box will alarm (with the red LED displayed). To reset the alarm, the Door Alarm trigger needs to be pressed down three times once the initial cause for the alarm has been dealt with. Afterward, the alarm system can be reset as usual. The red LED will remain on for an additional five seconds once the reset presses have been carried out, but the box is no longer sending out a trigger signal.

As standard from Hipac, the latching function is deactivated. This feature is controlled by toggle two on the 'latching switch' in the control box, which is highlighted on the wiring diagram near the normally open contacts. When this feature is activated or deactivated, the control box must be disconnected from 12V and then reconnected for any changes to take effect.

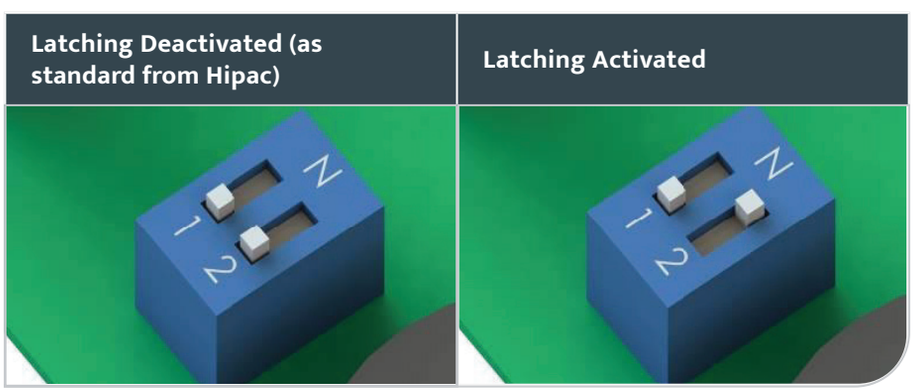

NOTE: Toggle one is for Hipac use and has no effect on the operation of the box.

Troubleshooting

Door Top Alarm Diagnostic Flow Chart

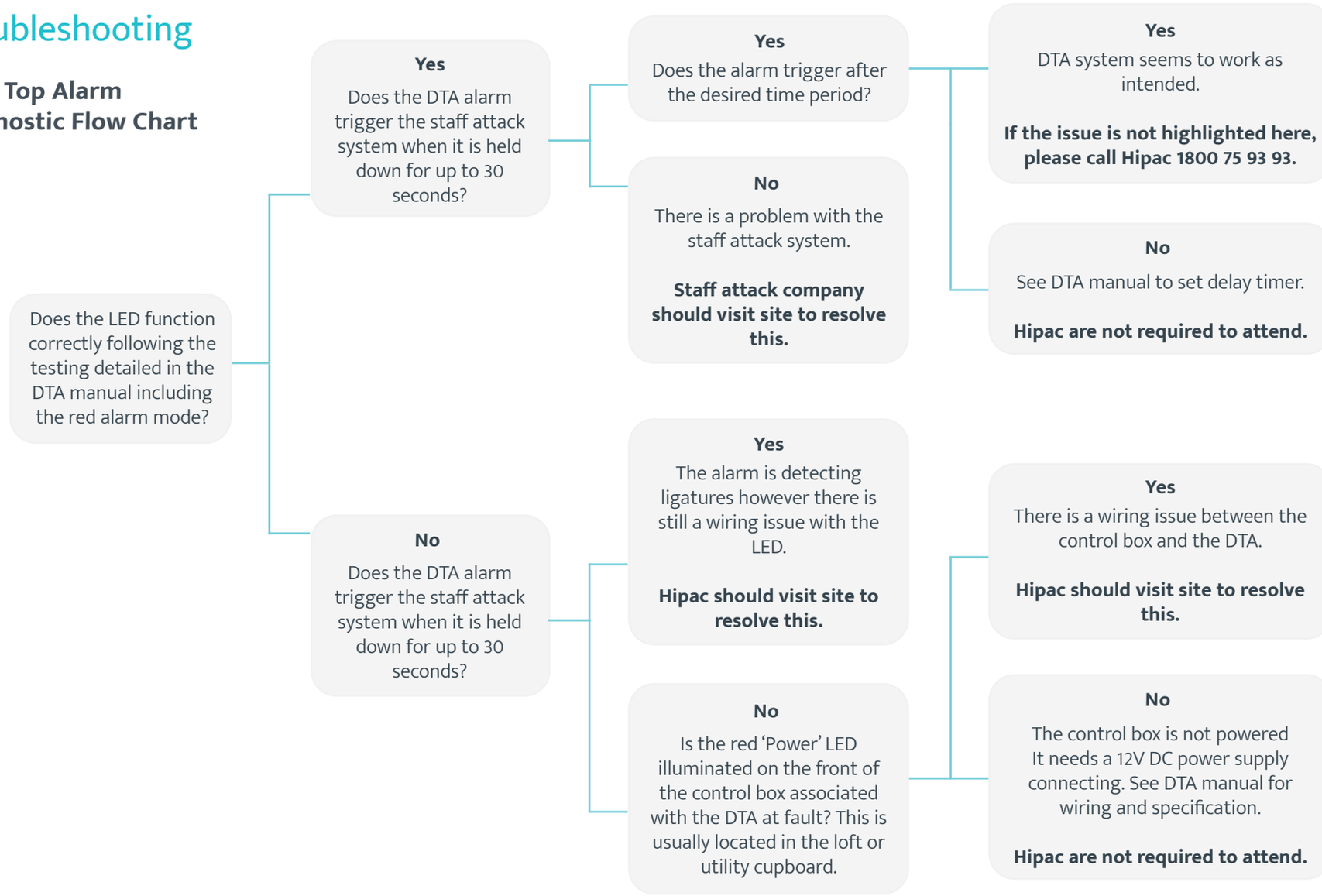

NOTE: Once the alarm has been activated, it can take up to 30 seconds to reset, depending on the control box model. If you hold the magnet to the LED while it is still in alarm, it will display red. Once the LED has turned off, the door alarm system has reset.

If the door is not fitted with the required perimeter gap, the door frame or seals may trigger the alarm when the door is closed. This could be the issue if the alarm triggers when the door is closed for the set delay time, which is 10 seconds as standard. If this is the case, the door has not been fitted correctly and needs to be adjusted.

Disclaimer:
All products must be fitted as per the directions detailed in the individual product Installation Instruction Document. Hipac takes no responsibility for incorrect installation/operation of the product. By purchasing this product, you are confirming that the product will be fitted as per the instructions.

Please note that Hipac offers a range of measures designed to reduce the risk of self-harm or suicide and does not offer any guarantee that it will not take place. The solutions have been designed as a deterrent only.

ABOUT HIPAC

Operating at the forefront of healthcare, we strive to redefine what's possible.
We provide superior products, design expertise and total solutions to help create environments where nothing stands in the way of patient care.

Contact information

1800 75 93 93 | info@hipac.com.au | www.hipac.com.au

Hipac
We're here for life